

Benbow Dining Armchair

DESCRIPTION

Light gray faux leather and sleek black steel legs give this dining armchair a clean, modern look that's easy to live with every day.

ITEM CODE

DAC1706P-LGRY

COLORS

Light Gray

MATERIALS

- Light Gray Faux Leather
- Legs in Sanded Black Powder-Coated Steel.

WEIGHT

NW: 48 Lbs
GW: 54 Lbs

DIMENSIONS

Width: 26”
Depth: 24”
Height: 30”
Seat Height: 19”



BIX-8036

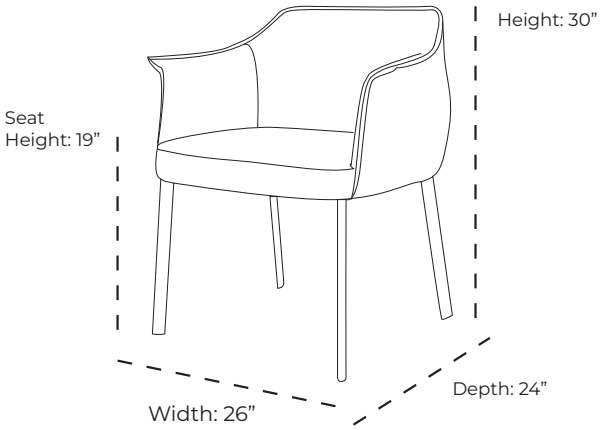

Benbow Dining Armchair

WHITELINE®
modern living

